600 Chrome Straight

Proprietary and Confidential
The information contained in this drawing is the sole property of Prestige Radiators Ltd.
Any reproduction in part or as a whole without the written permission of Prestige Radiators Ltd is prohibited.

Prestige Radiators Ltd - Unit 2, North Point Business Park, Eggborough, North Yorks, DN14
OJT - 0800 083 0373 - www.cnmonline.co.uk - www.prestigewashrooms.co.uk

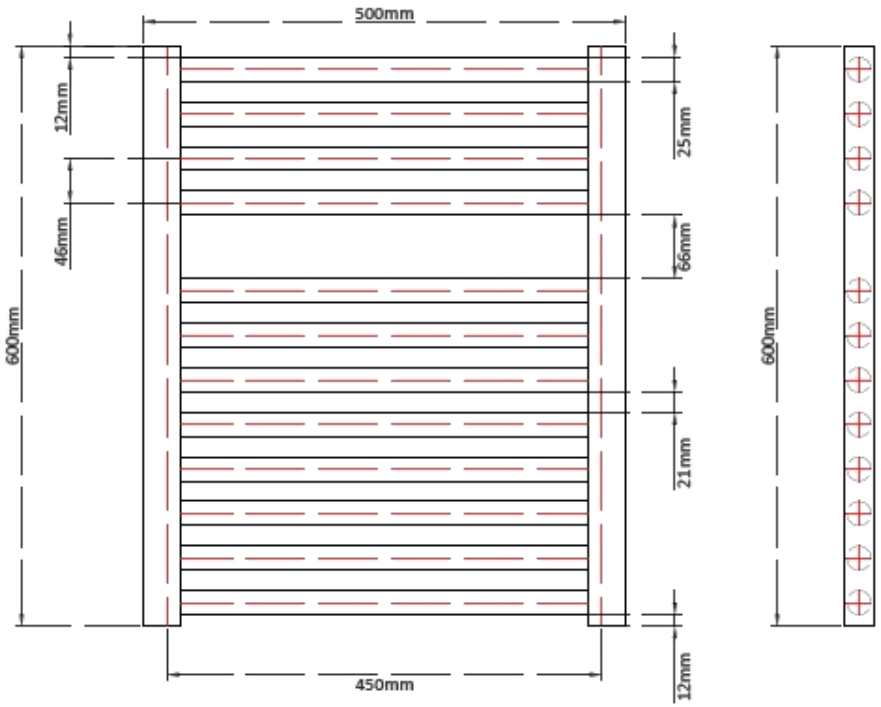

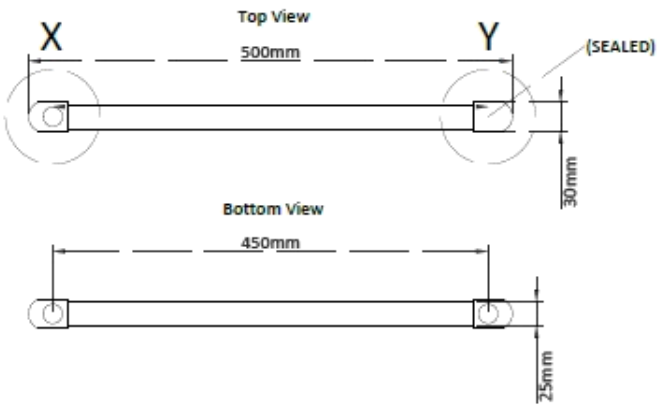

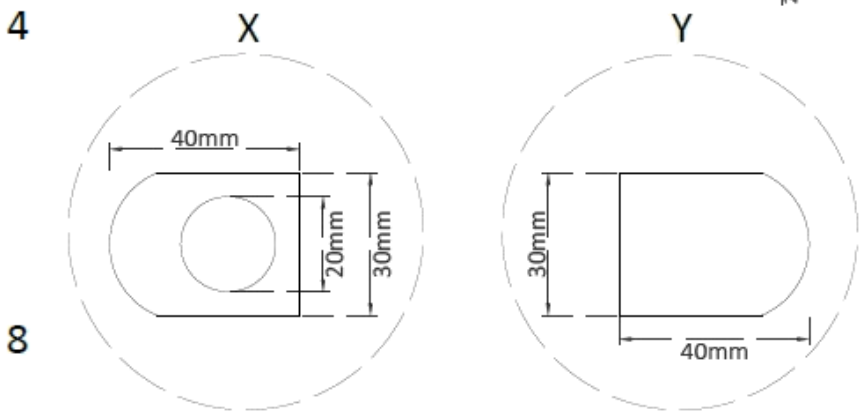

Tolerance (mm)	Tubes	Finish	Height (mm)	Width (mm)	Pipe Centres (mm)	Watts	BTU's
±2	12	Chrome	600	350	300	154	525
±2	12	Chrome	600	400	305	173	590
±2	12	Chrome	600	450	400	191	652
±2	12	Chrome	600	500	450	209	713
±2	12	Chrome	600	600	550	246	839

Product	Code	EAN
600 x 350 Chrome Straight	PP600X350CS	
600 x 400 Chrome Straight	PP600X400CS	
600 x 450 Chrome Straight	PP600X450CS	
600 x 500 Chrome Straight	PP600X500CS	
600 x 600 Chrome Straight	PP600X600CS	